PRODUCT CARD

Product data

Product code	**VD03-0003**	STK-code	**1710632**	EAN-code	**6410017106321**
Product name	Cable terminal D-box, D/a, 40-52			ETIM class	**EC002713**
Wires	2x(120-185) mm²				

Technical data

	-	
	-	
	-	
	-	
	-	
	-	
	-	
Max. Cross section	**185**	mm²
	-	
	-	
	-	
	-	
	-	
Weight	**3800**	g
IP-protection	**IP66**	
Standards	**EN60079-0; EN60079-7; EN61241-0; EN61241-1**	
Color / Material	**Black / Die cast Al**	
Mounting / Connection	**Screw 4xM10/8.8**	

Description

Cable terminal boxes consist of two base frames, two rubber seals and two cable flanges. A single terminal can accomodate two cables. Cable terminal boxes are ATEX certified.

Drawing

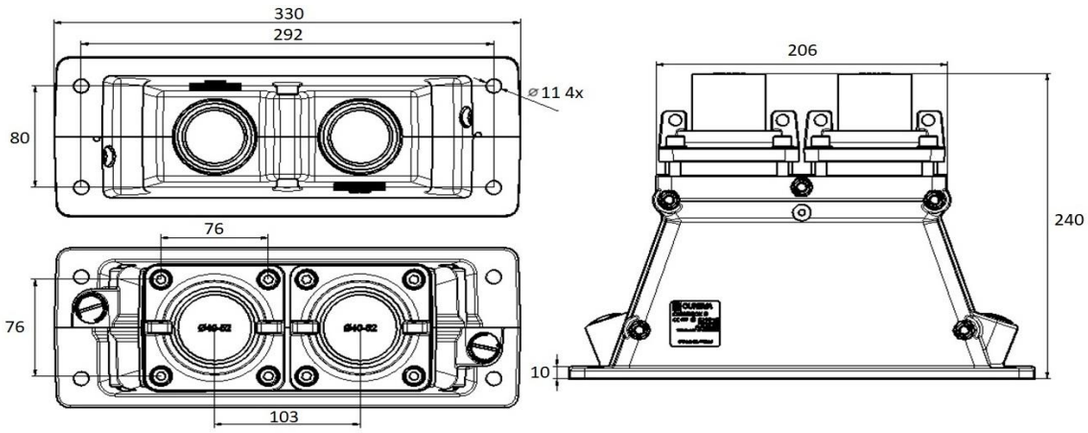

Package

Package	-	Pcs / Package	**1**	Weight [kg]	**3,80**
Length [mm]	-	Width [mm]	-	Height [mm]	-

Ouneva Oy
Teollisuustie 21
FI-82730 Tuupovaara
Finland

Tel. +358 400 179 750
info@ouneva.fi

www.ounevagroup.fi
www.ounevaproducts.fi